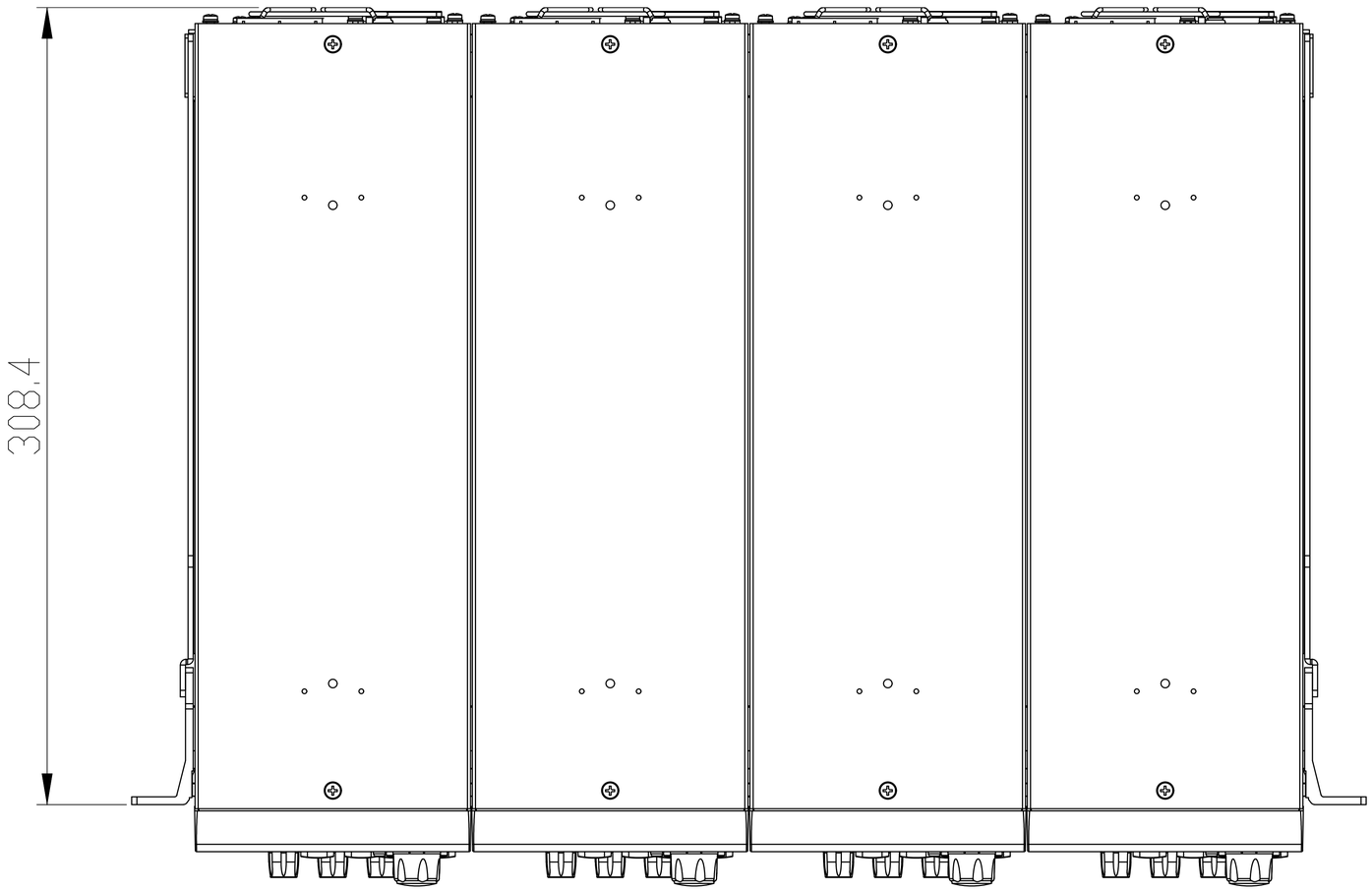
308.4

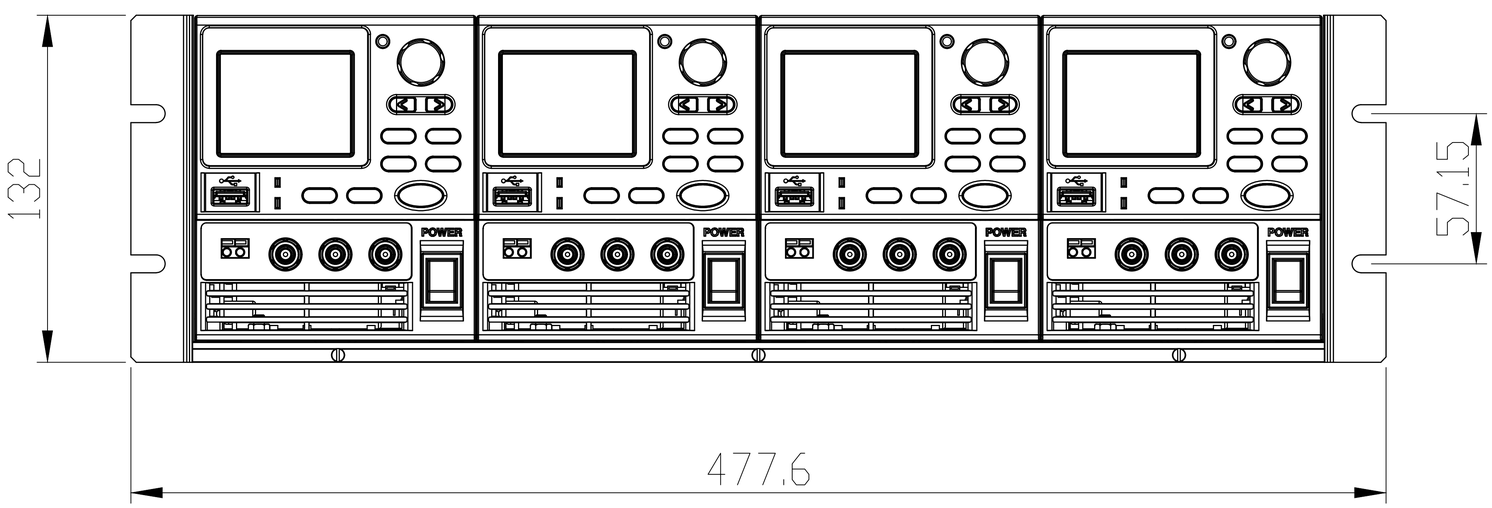
POWER
POWER
POWER
POWER
132
57.15
477.6

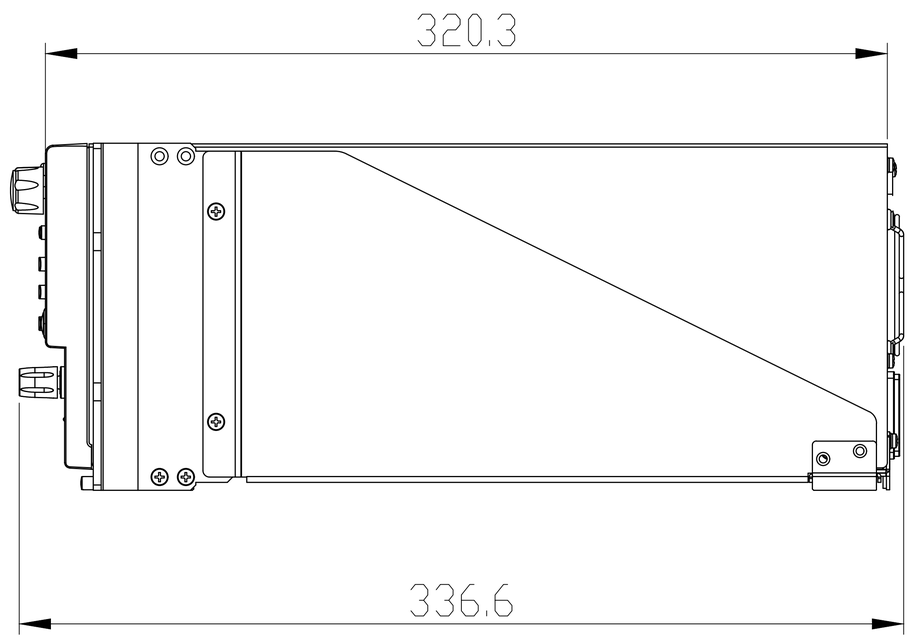
320.3
336.6